A3

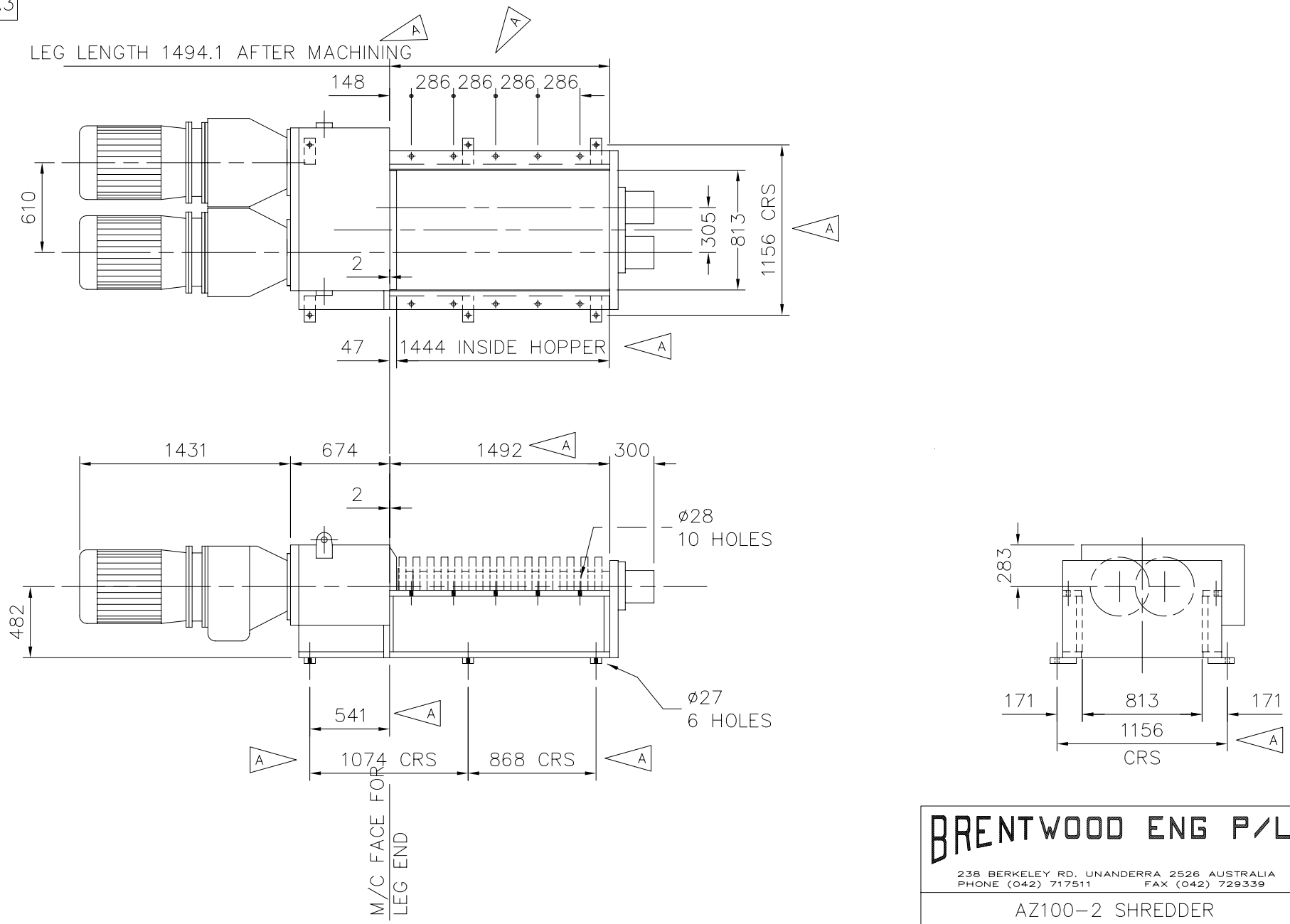

BRENTWOOD ENG P/L

238 BERKELEY RD. UNANDERRA 2526 AUSTRALIA
PHONE (042) 717511 FAX (042) 729339

AZ100-2 SHREDDER
1494 LEG LENGTH
GENERAL ARRANGEMENT

DATE 12/8/97	
SCALE 1:25	
DRAWN F.S.	LOCATION 18
DRAWING NO.	
4535A	

INDUSTRIAL SHREDDING MACHINES – RECYCLING MACHINERY
ASSOCIATED PROJECT ENGINEERING

BRENTWOOD PROPRIETARY – ALL RIGHTS RESERVED
PROPERTY OF BRENTWOOD ENGINEERING PTY LTD